## 产品物料清单

| 序号 | 物料名称 | 物料编号 | 数量 | 页数 | 规格描述 |
|---|---|---|---|---|---|
| ① | 1-0789-A | 94.01.0789.000 | 1 | 2 | 材料:AL 0.8AA |
| ② | D33不锈钢卡环 | 97.76.367.00 | 1 | 3 | 材料:0.6不锈钢 |

| DIMENSION TOLERANCE TABLE (UNLESS OTHERWISE STATED) (MM) | | | | PUNCH TOLERANCE TABLE (UNLESS OTHERWISE STATED) (ANGLE) | | |
|---|---|---|---|---|---|---|
| > 0-5 | > 5-30 | > 30-90 | > 90-150 | 0-10 | 10-50 | 50-120 |
| ±0.15 | ±0.2 | ±0.4 | ±0.5 | ±1° | ±0.5° | ±0.3° |
| > 150-250 | > 250-400 | > 400-700 | | 120-250 | 250-360 | |
| ±0.8 | ±1.5 | ±2 | | ±0.2° | ±0.166° | |
| "*" KEY CONTROL DIMENSION | | | | | | |

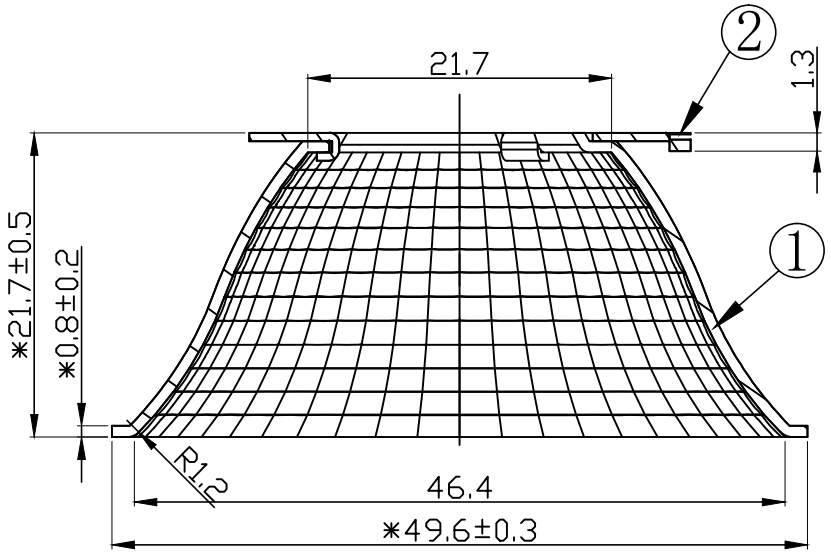


A-A

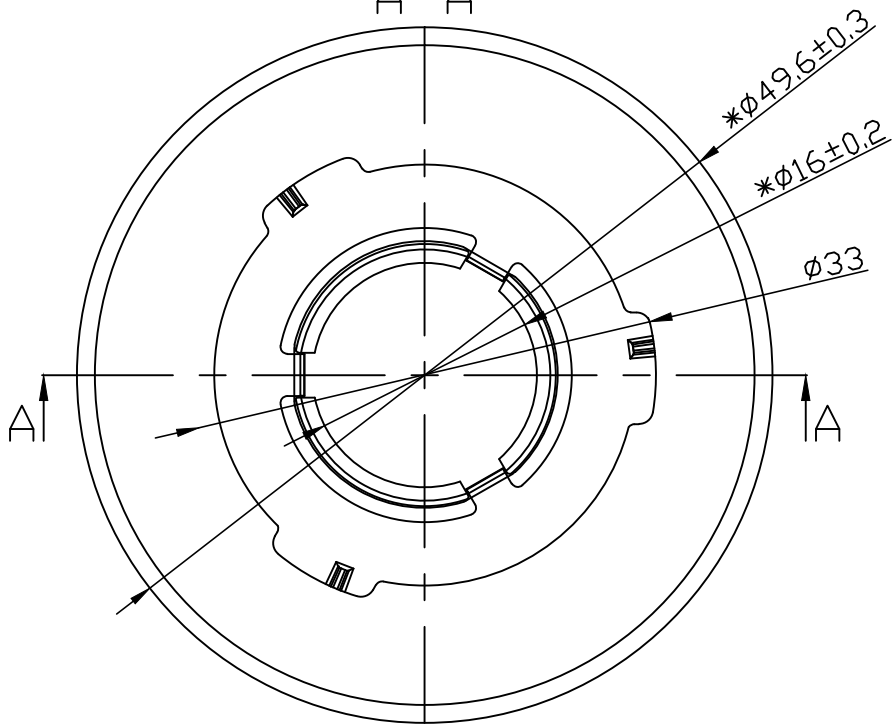


| | |
|---|---|
| Light Source | CITIAEN CLU026 LES9.8 |
| PlasticHolder | 90.70.124 |
| Metal Adaptar | |
| Design Angle | 40° ±3° |
| Measured Angle | 39.5° |

MATERIAL: T=0.8MM 1090AL
FINISH: ANDOIZING

| 标记 MARK | 处数 NO.OF MODIF. | 更改内容 MODIFICATIONS | 签名 SIGNED BY | 更改日期 MODIF. DATE |
|---|---|---|---|---|
| K0 | 1 | | | |

| | | | |
|---|---|---|---|
| 设计 DESIGNER | | 制图 DRAWN BY | |
| 工艺 TECHNICAN | | 审核 CHECKED BY | |
| 批准 APPROVED BY | | 日期 DATE(DD-MM-YYYY) | 13-9-2023 |

| | |
|---|---|
| 比例 SCALE | 1:1 |
| 视角 1st ANGLE PROJECTION | |
| 页数 PAGE | SHEET 1 OF 1 |

| | |
|---|---|
| P/N: 91.01.0788.000 | 版本/REV K0 |
| 产品名称 PRODUCT NAME | 1-0788-M |
| 客户代号 CUSTOMER ID | NT |
| 客户编号 CUSTOMER CODE | |

Nata